CONNECTRAC®

Express Kits

Express Solutions for Power & Data

Our Express Kits seamlessly manage both power and data cables and come in two installation options — under carpet tile and on top of any flooring surface. Both options are ideal for applications that need a grab-and-go power/data soution. Express Kits also work easily in both retrofit and new construction applications.

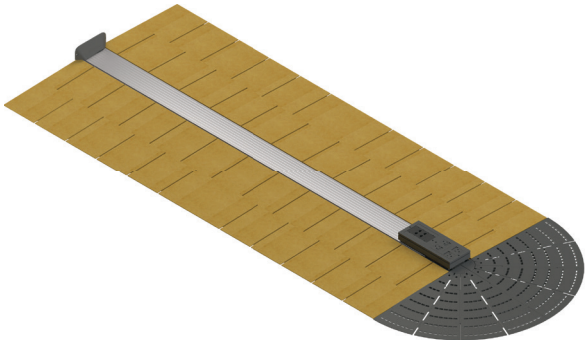

Express Kit for Installation Under Carpet Tile

Express Kit for Installation on Top of Flooring Surfaces

Express Kit Features & Benefits

- **Convenient Power & Data:** Seamlessly integrates into any layout with one prewired quad receptacle (single circuit) and supports up to eight keystone modules (data or AV)
- **All-In-One Kit:** Contains everything needed for installation including prewired power, versatile data and low-profile transition ramps
- **On-Floor or Under-Carpet Options:** Two installation options available to meet the needs of a variety of floor types
- **Versatile Design:** Includes a standard 6-foot raceway with 3-foot extensions available for extra design flexibility (easy to install and can be cut to size in the field)
- **Raceway Wall Feed:** Feed power and data from the wall or transition from 2400® or 4000® Series raceway systems
- **Tamper-Resistant (TR) Options:** TR system includes plug-in that secures connections and prevents electrical hazards for enhanced safety
- **ADA Compliant:** All installation options meet ADA Accessibility Guidelines
- **Single Circuit Furniture Feed (sold separately):** Hardwire device can be used in place of a receptacle device for hardwiring to furniture

Compliance

Multioutlet Assembly Fittings - File E514566
Wired Assemblies - File E201947

Product Specifications

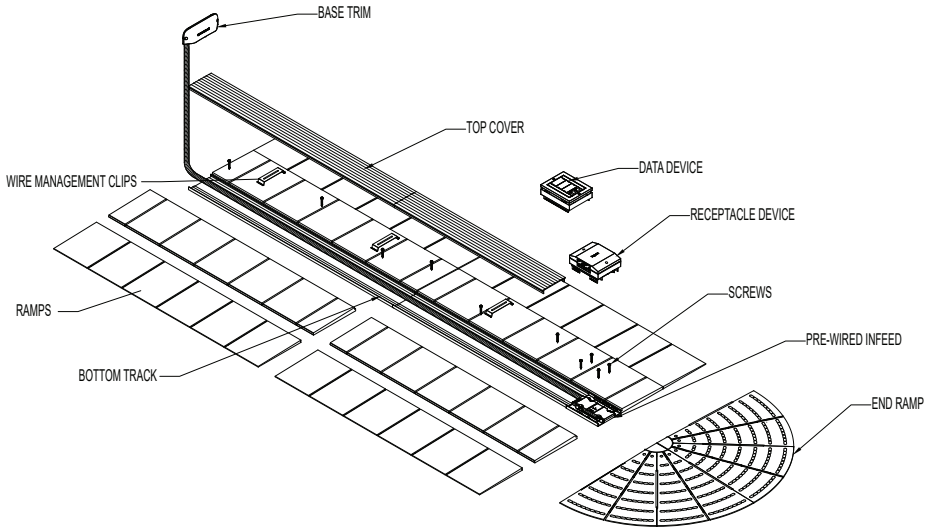

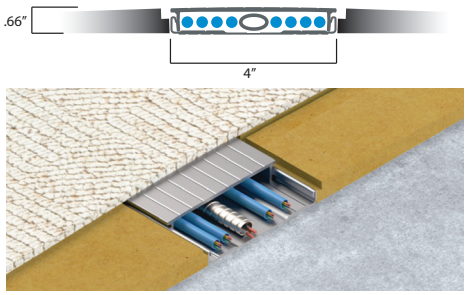

INCLUDED with each kit:
- One (1) 25′ prewired in-feed with Power Hub
- One (1) Receptacle Device (TR / Non TR)
- One (1) Data Device
- Two (2) 3′ Top Cover
- Two (2) 3′ Bottom Track
- Ten (10) Wire Management Clips
- One (1) Base Trim
- One (1) End Ramp
- Eight (8) 3′ Ramps High & Low
- Ten (10) Screws

General	
Capacity	Holds 0-8 Data Cables
Load Test	The Express Kits are designed to withstand 250 lb. individual point loads or a 4-point load of 1,000 lb.
Conduit	Prewired length of 25′ (3-wire), Galvanized Steel
Receptacle Device	4 NEMA 5-20R receptacles, PC Plastic
TR Receptacle Device	4 NEMA 5-20R TR receptacles, PC Plastic
Components	
Wireway	Extruded Aluminum
Top Cover	Extruded Aluminum
Wall Base Trim	PC Plastic
Data Device	PC Plastic, holds up to 8 keystone modules
Ramps	
End Ramp Assembly	PP Plastic
Transition Ramps	MDF
Installation	
To Surface	Screw mount to any subfloor material that is ½″ or thicker
System Specifications	
System Width	34 inches (channel is 4″, and each side ramp is 15″)
System Length	6 ft. Prewired Kit 3 ft. Extender

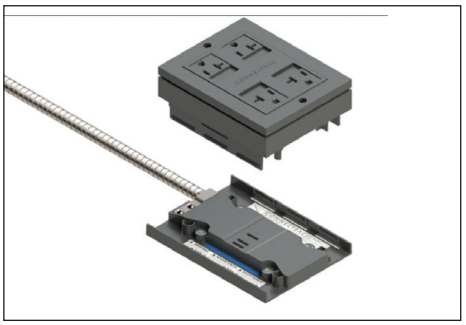

Carpet tiles create a hidden solution for power and data.

Part Number	Description
XPU6K	6′ Express Under-Carpet Kit w/ 25′ single circuit, receptacle & data device
XPU6KTR	6′ Express Under-Carpet Kit TR w/ 25′ single circuit, receptacle & data device
XPU3E	3′ Express Under-Carpet Extender

Product Specifications

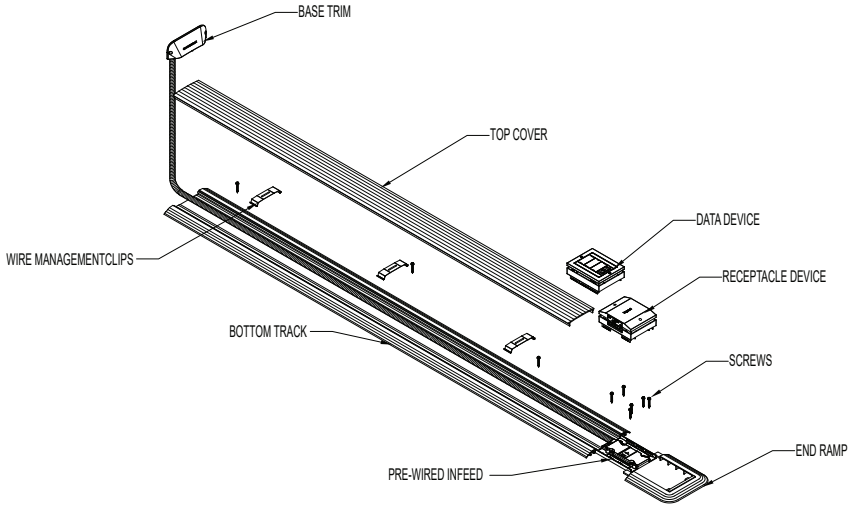

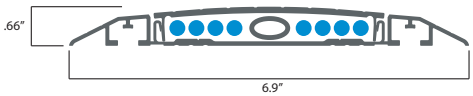

INCLUDED with each kit:
- One (1) 25′ prewired in-feed with Power Hub
- One (1) Receptacle Device (TR / Non TR)
- One (1) Data Device
- One (1) 6′ Top Cover
- One (1) 6′ Bottom Track
- Ten (10) Wire Management Clips
- One (1) Base Trim
- One (1) End Ramp
- Ten (10) Screws

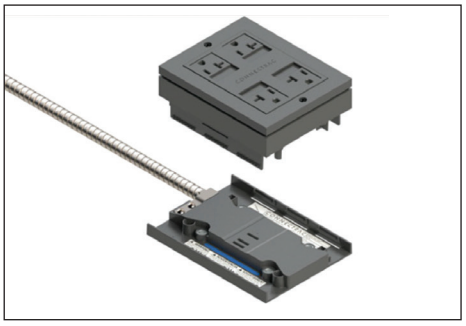

Receptacle Device snaps into the Express Power Hub, Power Hub is attached to a prewired, flexible conduit.

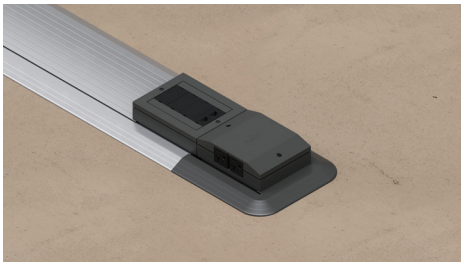

Durable anodized aluminum finish. Smallest footprint for on-floor system.

General	
Capacity	Holds 0-8 Data Cables
Load Test	The Express Kits are designed to withstand 250 lb. individual point loads or a 4-point load of 1,000 lb.
Conduit	Prewired length of 25′ (3-wire), Galvanized Steel
Receptacle Device	4 NEMA 5-20R receptacles, PC Plastic
TR Receptacle Device	4 NEMA 5-20R TR receptacles, PC Plastic
Components	
Wireway	Extruded Aluminum, Clear Anodized
Top Cover	Extruded Aluminum, Clear Anodized
Wall Base Trim	PC Plastic
Data Device	PC Plastic, holds up to 8 keystone modules
Ramps	
End Ramp Assembly	PC Plastic
Transition Ramps	Extruded Aluminum, Clear Anodized
Installation	
To Surface	Screw mount on top of any flooring material that is ½″ or thicker
System Specifications	
System Width	6.9 Inches
System Length	6 ft. Prewired Kit 3 ft. Extender

Part Number	Description
XPO6K-SV	6′ Express On-Floor Kit w/ 25′ single circuit, receptacle & data device
XPO6KTR-SV	6′ Express On-Floor Kit TR w/ 25′ single circuit, receptacle & data device
XPO3E-SV	3′ Express On-Floor Extender

Note: Connectrac Colors: “DG” is Dark Gray and “SV” is Silver finish.

Ordering Information

Catalog No./Item	Description/Specifications
V2400CT1 **FW2400CT1** 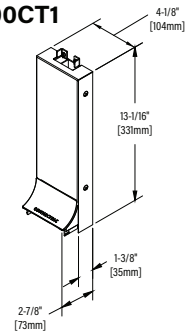	**2400D® Series to Connectrac Transition Fitting, Single Channel.** Works with both Flex® and Express Kit systems in over the floor and under carpet. Can accommodate up to 7 CAT 6 cables. Available in Ivory (V2400CT1) and Fog White (FW2400CT1). **Country of Origin: USA**
G4000CT2 **V4000CT2** 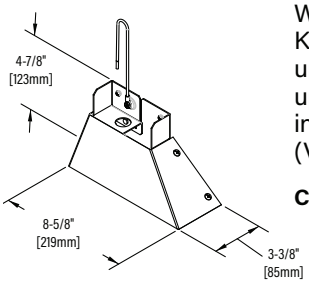	**4000 Series to Connectrac Transition Fitting, Dual Channel.** Works with both Flex and Express Kit systems in over the floor and under carpet. Can accommodate up to 28 CAT 6 cables. Available in Ivory (G4000CT2) and Gray (V4000CT2) **Country of Origin: USA**

Catalog No./Item	Description/Specifications
G4000CT1 **V4000CT1** 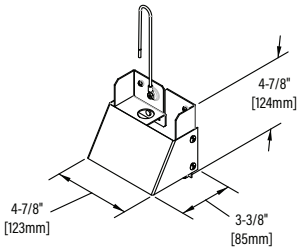	**4000® Series to Connectrac Transition Fitting, Single Channel.** Works with both Flex® and Express Kit systems in over the floor and under carpet. Can accommodate up to 28 CAT 6 cables. Available in Ivory (G4000CT1) and Gray (V4000CT1). **Country of Origin: USA**
G4000CT3 **V4000CT3** 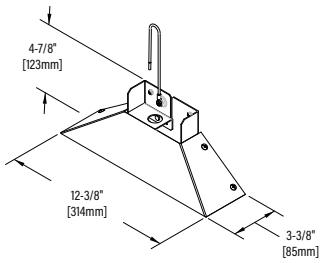	**4000 Series to Connectrac Transition Fitting, Three Channel.** Works with both Flex and Express Kit systems in over the floor and under carpet. Can accommodate up to 28 CAT 6 cables. Available in Ivory (G4000CT3) and Gray (V4000CT3) **Country of Origin: USA**

Note: For 4000 Series Raceway, replace the * with either “G” for Gray or “V” for Ivory finish. For 2400D Series Raceway, replace the * with either “V” for Ivory or “FW” for Fog White finish.

Ordering Information

Catalog No./Item	Description/Specifications
XPWT2-SV **XPWT12-SV** 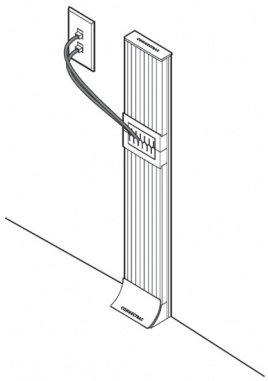	**Data Channel Walltrac –** PoA Data Channel Walltrac is an extruded aluminum encasement that sits on the outside of a wall, and connects to a Datatrac. This is used to cover the data cables that come from the building. There are 2 options: XPWT2-SV is a 2′ Raceway Walltrac & XPWT12-SV is a 12′ Raceway Walltrac. **Country of Origin: China**
XPU90 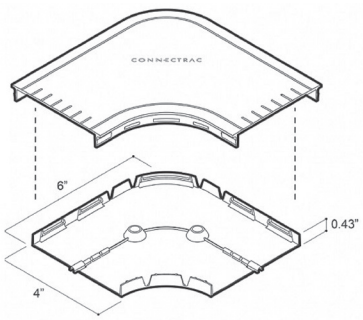	**Under-Carpet Datatrac Corner –** A Datatrac Corner connects Datatracs at a 90° angle. This sits next to a Powertrac, either on the inside or outside. **Country of Origin: China**
FXERFUM 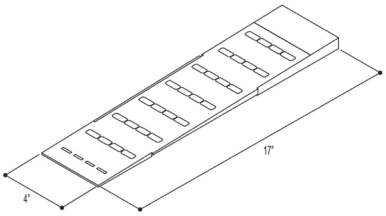	**End Ramps Filler –** End Ramps Filler sit at the end of the system when an extra channel is needed. **Country of Origin: China**

Catalog No./Item	Description/Specifications
FX-XPU-3TB **FX-XPU-6TB** 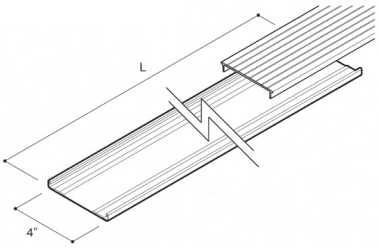	**Data channel –** Data channels can be ganged alongside the main Express Under-Carpet Raceway Kit to provide additional data capacity. Data channels include both a bottom Datatrac and a Top Cover. Each data channel typically holds up to 10 cables for our Express Under-Carpet Kit. **Country of Origin: USA**
XPO90-SV 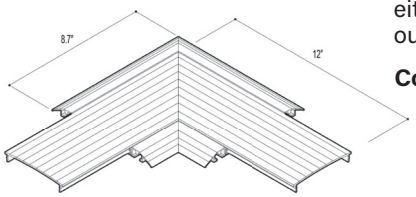	**On Floor Datatrac Corner –** A Datatrac Corner connects Datatracs at a 90° angle. This sits next to a Powertrac, either on the inside or outside. **Country of Origin: USA**

Note: Connectrac Colors: “DG” is Dark Gray and “SV” is Silver finish.

Ordering Information

Catalog No./Item	Description/Specifications
FF1C-DG 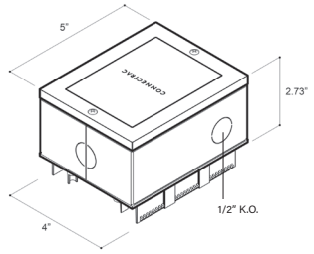	**Hardwire Device** – A Hardwire Device is a single-circuit monument that can be wired to connect to most furniture base feeds or other similar applications. This power device is NOT intended to have electrical components such as power outlets/faceplates/switches, mounted directly to it. Includes 1/2″ K.O. **Country of Origin: Taiwan**
FX-XP-VWM-DG 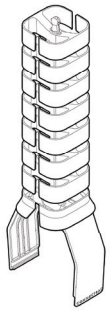	**Vertical Wire Manager** – The Vertical Wire Manager seamlessly snaps to the Receptacle and Data devices for easy cable management. It can be adjusted to fit either the long or short way on a device, and can slide to cover the area desired. Accommodates work surfaces between 30″- 48″ in height of the floor. **Country of Origin: China**
FX-XP-RIF 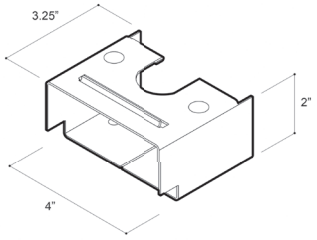	**Rough-In Frame** – The Rough-in Frame is used in a building during new construction. It is put in place prior to the wall being put up, marking the placement of the Flex® system. **Country of Origin: Taiwan**

Catalog No./Item	Description/Specifications
FX-XP-AV-DG 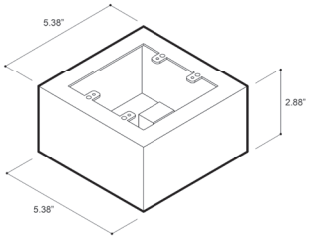	**A/V Device** – An A/V Device is a customizable data device that holds any standard double-gang faceplate. **Country of Origin: USA**
FX-XP-FG-DG 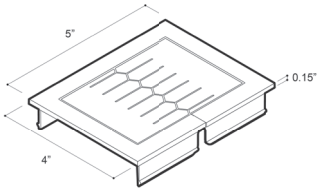	**Grommet** – The Grommet allows cables to enter/exit the raceway. **Country of Origin: China**
FX-XP-TR1-DG **FX-XP-TR2-DG** **FX-XP-TRF-DG** 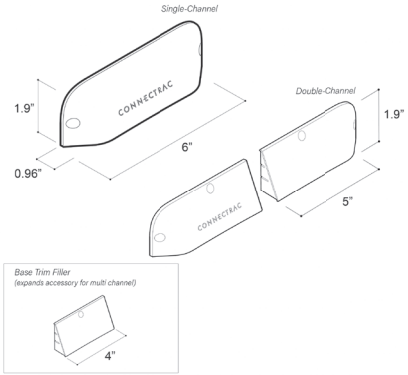	**Base Trim** – A Base Trim covers the hole in the wall and is placed at the entrance of the raceway. FX-XP-TR1-DG is for a single-channel raceway, FX-XP-TR2-DG is for double-channel raceway, and FX-XP-TRF-DG is a base trim filler accessory to expand base trim to accommodate 3 or more channels. Available in Dark Gray. **Country of Origin: China**

legrand®

Legrand, North America
60 Woodlawn Street
West Hartford, CT 06110
877-295-3472
www.legrand.us

Canada
844-977-3783
www.legrand.ca

FOLLOW US

© Copyright 2025 Legrand All Rights Reserved