DRAWING NO. SD035209

REV	DATE	DESCRIPTION	ECO	BY	CHK.
C	3/20/2009 12:00:00 AM	REDRAWN INTO PRO-E	17207	DG	MA

CATALOG NUMBER 11	STRANDED COPPER CONDUCTOR ACCOMMODATED			BOLT SIZE	METRIC BOLT SIZE	DIMENSIONS								
	CODE (AWG)	NAVY	METRIC SIZE (CLASS 2)			B	C	E	K DIA.	L	N	O.D.	T REF.	Z MIN.
YA6CL2TC10E1	#6 AWG	-----	-----	#10	----	.54 [14]	.42 [11]	1.00 [25]	.21 [5]	2.32 [59]	.25 [6]	.29 [7]	.09 [2]	.27 [7]
YA6C2L51				#10	----		.42 [11]	.50 [13]	.21 [5]	1.79 [46]	.22 [6]		.09 [2]	.27 [7]
YA6CL2TC10				#10	----		.42 [11]	.62 [16]	.21 [5]	1.94 [49]	.25 [6]		.09 [2]	.27 [7]
YA6CL2TC10E2				#10	----		.42 [11]	.75 [19]	.21 [5]	2.07 [53]	.25 [6]		.09 [2]	.27 [7]
YA6C2L52				1/4	M6		.45 [11]	.50 [13]	.27 [7]	1.88 [48]	.25 [6]		.08 [2]	.33 [8]
YA6C2L				1/4	M6			.62 [16]		2.01 [51]	.25 [6]			.34 [9]
YA6CL2TC14E				1/4	M6			.50 [13]		1.94 [49]	.31 [8]			.33 [8]
YA6CL2TC14				1/4	M6			.62 [16]		2.07 [53]	.31 [8]			
YA6CL2TC14G1 13				1/4	M6			.62 [16]		2.07 [53]				
YA6CL2TC14E2				1/4	M6			.75 [19]		2.19 [56]				
YA6CL2TC14E1				1/4	M6		.45 [11]	1.00 [25]	.27 [7]	2.44 [62]	.31 [8]		.08 [2]	.33 [8]
YA6CL2TC38				3/8	----		.58 [15]	1.00 [25]	.39 [10]	2.63 [67]	.41 [10]		.06 [2]	.42 [11]
YA6CL2TC38E10				3/8	----	.54 [14]	.58 [15]	1.25 [32]	.41 [10]	2.88 [73]	.41 [10]	.29 [7]	.06 [2]	.42 [11]

CONNECTOR SIZE	TOLERANCES						
	B	C	E	K DIA.	L	N	O.D.
-8C THRU -25	±.06	+.04 -.02	±.02	±.02	±.09	±.03	±.01
-26 THRU -34	±.08	+.04 -.02	±.02	±.02	±.12	±.03	±.01
-35 AND UP	±.09	±.06	±.02	±.02	±.15	±.06	±.01

TOLERANCE BLOCK

INSTALLATION TOOLING (# CRIMPS)

CATALOG NO.	COLOR CODE	DIE INFORMATION		MECHANICAL					HYDRAULIC							DIELESS (# CRIMPS)	WIRE STRIP LENGTH
		DIE INDEX	TYPE	Y2MR 6	OUR840	MD6 MD7	MD6--R2 BAT500	MD7-34R	BCT500 YCT500	Y34A 8 Y34B Y34BH 5	Y35, Y39 Y750, BAT35 BAT750 5	Y46 4 5	Y45 3 5	Y48B	Y60BHU		
ALL LISTED ABOVE	13 BLUE	7 374	BLUE DIE SET	BLUE (1)	X5CRT(1) X8CART(1)	W5CRT(1) W5CVT(1)	W5CRT(1) W5CVT(1)	W5CRT(1) W5CVT(1)	X5CRT (1) X8CART(1) W5CRT (1) W5CVT (1)	----	U5CRT(1) U8CABT(1)	U5CRT(1) U8CABT(1)	U5CRT(1) U8CABT(1)	----	----	MECHANICAL: MY29-3(1) MY29-11(1)	5/8"
			NEST	----	----	----	----	----	----	B6CD(1) A6CD(1)	U6CD-1(1)	U6CD-1(1)	U6CD-1(1)	----	----		
			INDENTOR							Y34PR	Y34PR	Y34PR	Y34PR				

NOTES:

1. MATERIAL: COPPER TUBING.
2. FINISH: TIN PLATED.
3. CATALOG # PT6515 ADAPTOR IS REQUIRED TO USE "U" DIES IN Y45 SERIES TOOLS.
4. CATALOG # PUADP-1 ADAPTOR IS REQUIRED TO USE "U" DIES IN Y46 SERIES TOOLS.
5. Y35P3 INDENTOR ADAPTOR REQUIRED FOR Y34PR INDENTOR.
6. PERMANENT DIE IN TOOING.
7. DIMENSIONS IN BRACKETS [ ] ARE IN MILLIMETERS ROUNDED OFF TO THE NEAREST MILLIMETER UNLESS OTHERWISE NOTED, AND ARE FOR REFERENCE ONLY.
8. FOR USE BY CUSTOMERS THAT HAVE THIS HYPRESS.™ NO NEW Y34A HYPRESS™ TOOLS ARE BEING PROCESSED. Y34A USES A--D TYPE NEST DIES.
9. CONNECTORS ARE "UL" LISTED; UNDRILLED VERSIONS ARE NOT "UL" LISTED.
10. CONNECTORS ARE "CSA" CERTIFIED; UNDRILLED VERSIONS ARE NOT "CSA" CERTIFIED.
11. FOR UNDRILLED VERSIONS ADD SUFFIX "-U" TO END OF CATALOG NUMBER. FOR UNDRILLED VERSIONS, USE D MIN. = N MAX. + E MIN. + Z MIN.
12. "X", "W-RT", "W-VT", "U", & "L" DIE SETS ARE COLOR CODED. "A", "B" & "C" DIES ARE NOT COLOR CODED. NESTS AND INDENTOR TYPE ARE NOT COLOR CODED.
13. YA6CL2TC14GI DOES NOT HAVE COLOR CODE.

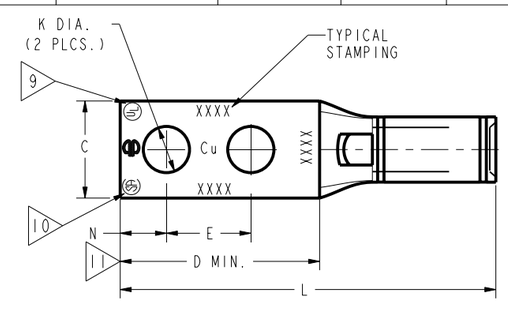

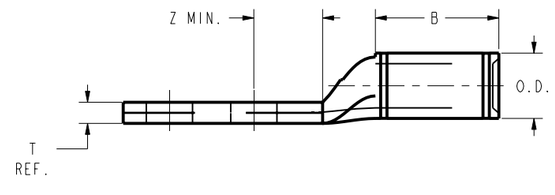

REFERENCE : SE209512
SUPERSEDES : SC91923

TO ORDER BURNDY® PRODUCTS CALL

UNITED STATES
1-800-346-4175 (LONDONDERRY, NH)

CANADA:
1-800-361-6975 (QUEBEC)
1-800-387-6487 (ALL OTHER PROVINCES)

FOR PRODUCT INFO: http://www.burndy.com

HYLUG™

ITEM NO:	N/A
CAT. NO:	YA6C-2L-, YA6CL-2TC- (TABLE)
DRAWN BY:	J.MICHAUD 11/18/94
CHECKER:	D.FILLION 11/18/94
DSN APPVL:	C.PALAGI 10/24/94
MFG APPVL:	-- --
QA APPVL:	C.ACKERMAN 11/17/94
MKT APPVL:	-- --
PROD FAM:	--
PROJECT #:	--
DOCUMENT TYPE:	Sales
REL LEVEL:	Released

BURNDY

SCALE: NTS

SIZE	DRAWING NO	REV
D	SD035209	C
	SHEET 3 OF 18	

REV: PE0200