DRAWING NO. SE210997

REV	DATE	DESCRIPTION	ECO	BY	C'H'K.
N	03/25/2014 03:00:00 AM	UPDATED AS PER MARKUP ---	35437	TS	BT

CATALOG NUMBER ◁5	FIG. NO.	CONDUCTOR RANGE ALUMINUM OR COPPER	BOLT HOLE SIZE	DIMENSIONS C MAX.	D	E	H MAX.	K DIA.	L	N	T	RECOMMENDED TIGHTENING TORQUE: IN.LBS N.M ◁6
KA6U ◁1A ◁2A	1	14 STR. - 6 STR.	1/4" [M6]	.50 [13]	.63 [16]	----	.51 [13]	.27 [7]	1.06 [27]	.25 [6]	.09 [2]	35 (4)
KA2U ◁1A ◁2A	1	14 STR. - 2 STR.	1/4" [M6]	.51 [13]	.63 [16]	----	.56 [14]	.27 [7]	1.16 [29]	.31 [8]	.10 [3]	50 (6)
KA25U	1	14 STR. - 1/0 STR.	1/4" [M6]	.63 [16]	.81 [21]	----	.92 [23]	.27 [7]	1.50 [38]	.44 [11]	.19 [5]	50 (6)
KA26U	2	14 STR. - 2/0 STR.	1/4" [M6]	.64 [16]	.81 [21]	----	.80 [20]	.27 [7]	1.47 [37]	.45 [11]	.19 [5]	120 (14)
KA29U	2	6 STR. - 250 kcmil	5/16" [M8]	1.02 [26]	.94 [24]	----	1.14 [29]	.33 [8]	2.00 [51]	.47 [12]	.25 [6]	275 (31)
KA29UGI2	2	6 STR. - 250 kcmil	3/8" [M10]	1.02 [26]	.94 [24]	----	1.14 [29]	.42 [11]	2.00 [51]	.47 [12]	.25 [6]	275 [31]
KA30U	2	6 STR. - 300 kcmil	5/16" [M8]	1.02 [26]	.94 [24]	----	1.14 [29]	.33 [8]	2.00 [51]	.45 [11]	.25 [6]	275 (31)
KA31U	2	6 STR. - 350 kcmil	3/8" [M10]	1.14 [29]	1.03 [26]	----	1.27 [32]	.42 [11]	2.25 [57]	.52 [13]	.25 [6]	275 (31)
KKA31U2N	3	6 STR. - 350 kcmil	1/2" [M12]	1.27 [32]	3.16 [80]	1.75 [44]	1.52 [39]	.56 [14]	5.50 [140]	.63 [16]	.38 [10]	275 (31)
KA34U	2	4 STR. - 500 kcmil	3/8" [M10]	1.52 [39]	1.50 [38]	----	1.58 [40]	.42 [11]	2.81 [71]	.88 [22]	.31 [8]	450 (51)
KA36U	2	2 STR. - 600 kcmil	3/8" [M10]	1.52 [39]	1.72 [44]	----	1.58 [40]	.42 [11]	3.19 [81]	.78 [20]	.44 [11]	550 (62)
KA36U2N	4	2 STR. - 600 kcmil	1/2" [M12]	1.52 [39]	3.22 [82]	1.75 [44]	1.57 [40]	.56 [14]	4.69 [119]	.63 [16]	.44 [11]	550 (62)
KA40U	2	300 - 800 kcmil	1/2" [M12]	1.77 [45]	1.69 [43]	----	1.95 [50]	.53 [13]	3.38 [86]	.88 [22]	.50 [13]	550 (62)
KA40U2N	4	300 - 800 kcmil	1/2" [M12]	1.77 [45]	3.03 [77]	1.75 [44]	1.95 [50]	.56 [14]	4.75 [121]	.63 [16]	.50 [13]	550 (62)
KA44U	2	500 - 1000 kcmil	5/8" [M16]	1.77 [45]	1.88 [48]	----	1.95 [50]	.66 [17]	3.50 [89]	.88 [22]	.50 [13]	550 (62)
KA44U2N	4	500 - 1000 kcmil	1/2" [M12]	1.77 [45]	3.03 [77]	1.75 [44]	1.95 [50]	.56 [14]	4.75 [121]	.63 [16]	.50 [13]	550 (62)
KK2A28U2N	5	6 STR. - 4/0 STR.	1/2" [M12]	1.64 [42]	3.03 [77]	1.75 [44]	1.20 [30]	.56 [14]	5.38 [137]	.63 [16]	.25 [6]	275 (31)
KKA36U2N	3	2 STR. - 600 kcmil	1/2" [M12]	1.39 [35]	3.25 [83]	1.75 [44]	1.52 [39]	.56 [14]	5.50 [140]	.63 [16]	.38 [10]	550 (62)
KK2A36U2N	5	2 STR. - 600 kcmil	1/2" [M12]	2.76 [70]	3.37 [86]	1.75 [44]	1.58 [40]	.56 [14]	5.62 [143]	.63 [16]	.38 [10]	375 (42)

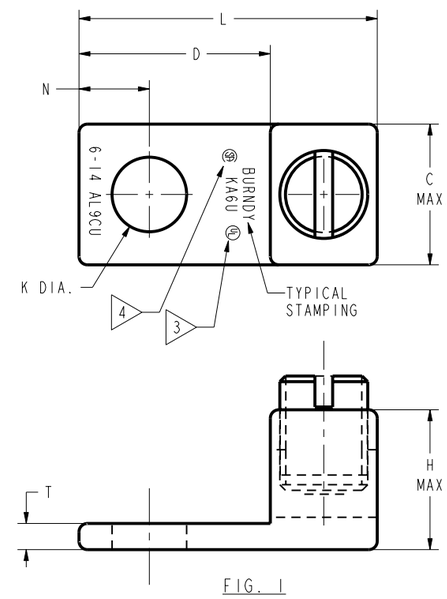

FIG. 1

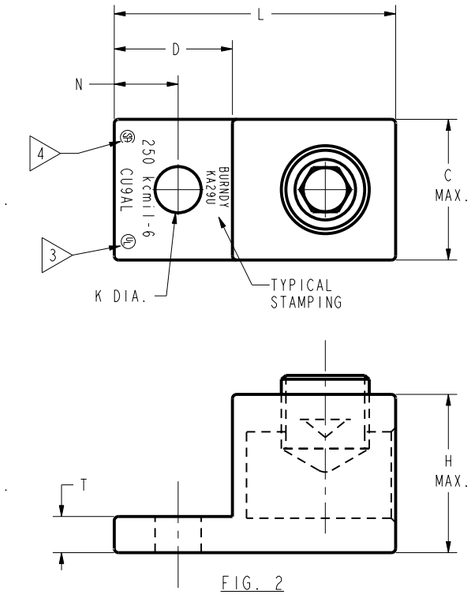

FIG. 2

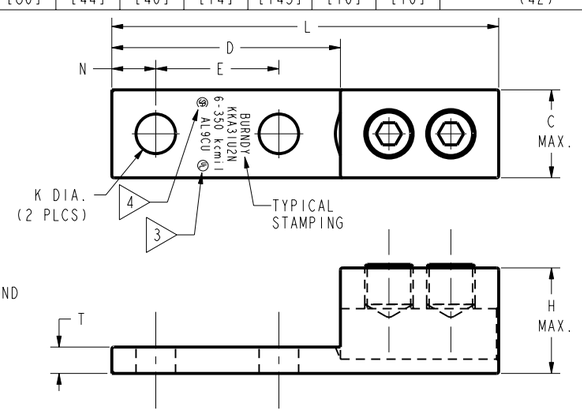

FIG. 3

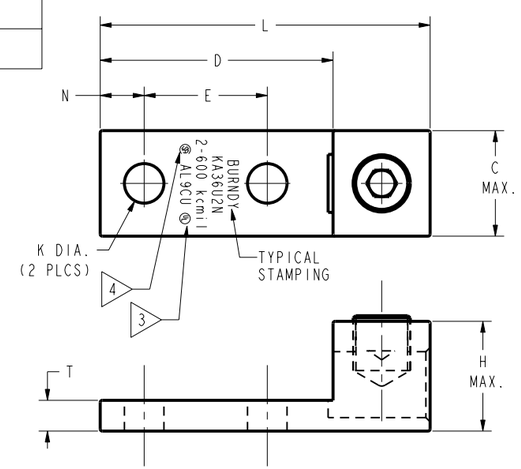

FIG. 4

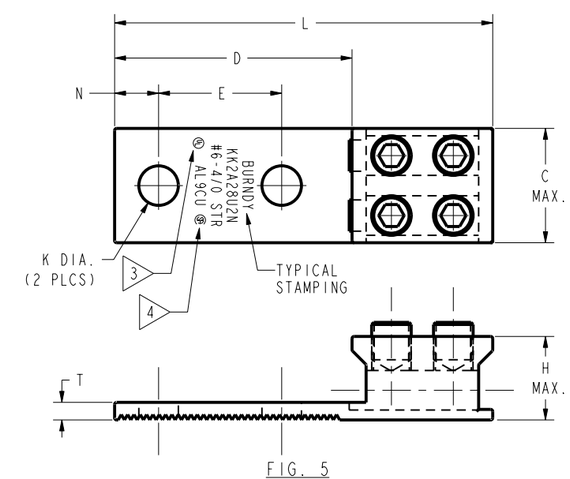

FIG. 5

NOTES:

1. MATERIAL-BODY: ALUMINUM
   SCREW: STEEL ALUMINUM ◁1A
2. FINISH-BODY: TIN PLATED
   SCREW: TIN PLATED ZINC PLATED ◁2A
3. ▷ CONNECTORS ARE UL LISTED TO UL486A- 486B FOR ALUMINUM AND COPPER CONDUCTORS AT 90°C. STAMP MAY READ CU9AL OR AL9CU TO INDICATE THIS LISTING.
4. ▷ CONNECTORS ARE CSA CERTIFIED TO C22.2, NO. 65 FOR INDICATED CONDUCTOR RANGE.
5. ▷ "N" INDICATES NEMA STANDARD STUD HOLES.
6. ▷ LISTED TORQUE VALUES ARE FOR MAXIMUM CONDUCTOR SIZES ACCOMMODATED.
7. DIMENSIONS IN BRACKETS [ ] ARE IN MILLIMETERS ROUNDED OFF TO THE NEAREST MILLIMETER, UNLESS OTHERWISE NOTED, AND ARE FOR REFERENCE ONLY.
8. PARTS WITH CATALOG NUMBERS ENDING IN "M" REQUIRE A METRIC, HEX. HEAD, SOCKET SET SCREW.
9. NOT RECOMMENDED FOR USE IN HIGHLY CORROSIVE ENVIRONMENT.

CONNECTOR SIZE	TOLERANCES L
8C - 25	±.09
26 - 34	±.12
35 AND UP	±.15

TO ORDER BURNDY® PRODUCTS CALL

UNITED STATES
1-800-346-4175 (LONDONDERRY, NH)

CANADA:
1-800-361-6975 (QUEBEC)
1-800-387-6487 (ALL OTHER PROVINCES)

FOR PRODUCT INFO: http://www.burndy.com

UNIVERSAL TERMINAL

ITEM NO:	392018
CAT. NO:	KA-U, KA-UM, KKA-U (TABLE)
DRAWN BY:	P. LAPONIUS 04/10/97
CHECKER:	J. MICHAUD 04/21/97
DSN APPVL:	K. MELLO 04/30/97
MFG APPVL:	-- --
QA APPVL:	D. VARIO 05/02/97
MKT APPVL:	P. WERTHMAN 05/01/97
SCALE:	5:1
PROD FAM:	CM&R_Mechanical
PROJECT #:	--
DOCUMENT TYPE:	Sales
REL LEVEL:	Released
SIZE	D
DRAWING NO	SE210997
SHEET 1 OF 5	
REV	N

REV: PE0200